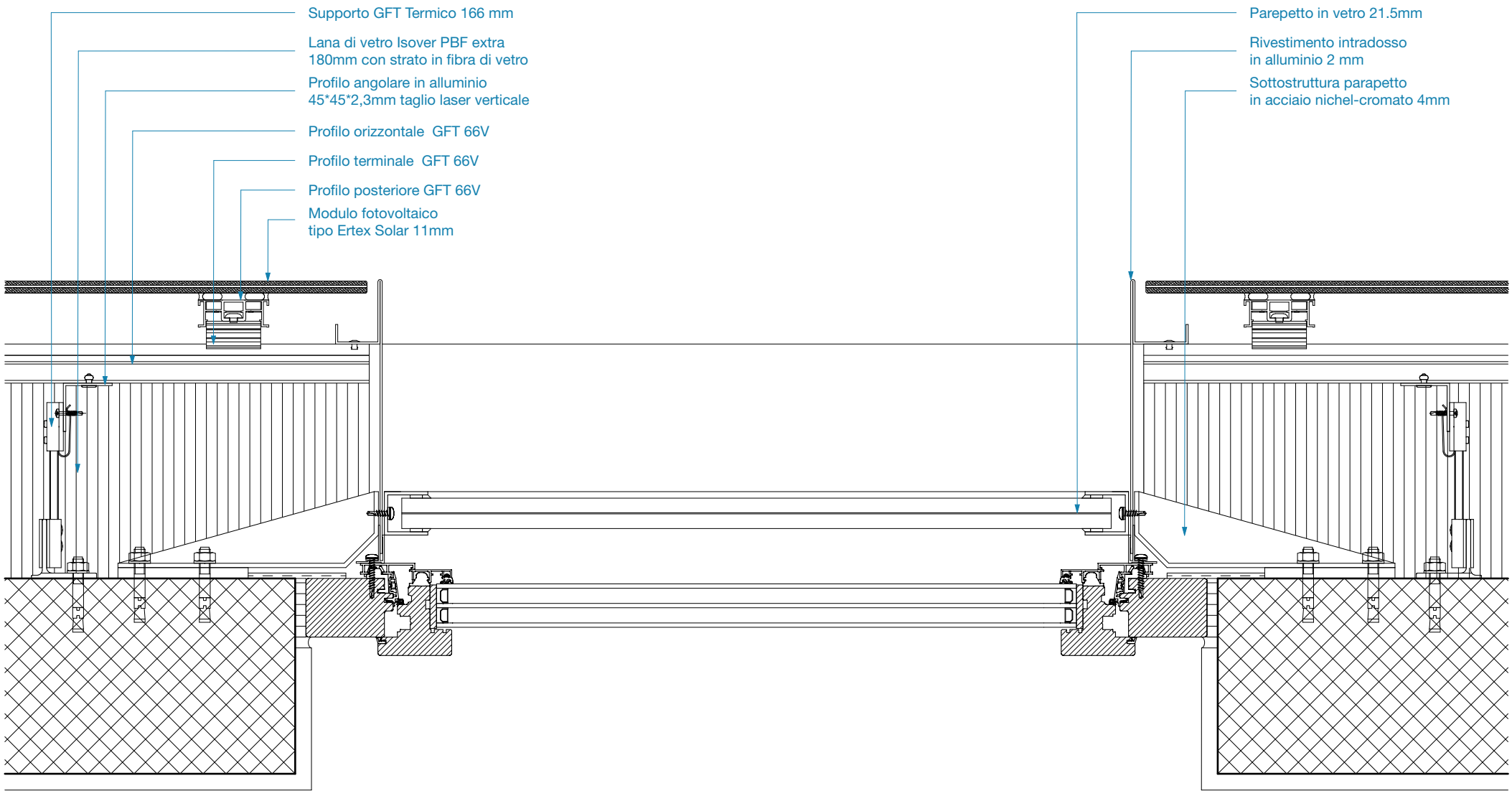

Project name
Fehlmann Areal
Plan name
Sezione orizzontale
Source of detail
Bob Gysin + Partner Architekten

Scale
A3 - 1:5
0 5 10 20
Redrawn by
BUK-ETHZ
Date of creation
11.01.2022

SOLARCHITECTURE
sun as a building material
BUK / ETH zürich